LABS

(Laboratory Archival Biological Storage)

CRYOSCIENCE by Taylor-Wharton™

CRYOSTORAGE SYSTEM

OPERATION & MAINTENANCE INSTRUCTIONS

CAUTION - SAFETY FIRST!

- REVIEW AND UNDERSTAND ALL SAFETY PROCEDURES IN FORM # TW-10 P/N 7950-8052 BEFORE ATTEMPTING TO INSTALL, OPERATE OR PERFORM MAINTENANCE ON THIS CRYOSTORAGE SYSTEM.
- DO NOT ATTEMPT TO USE OR MAINTAIN THIS UNIT UNTIL YOU READ AND UNDERSTAND THESE INSTRUCTIONS.
- DO NOT PERMIT UNTRAINED PERSONS TO USE OR MAINTAIN THIS UNIT.
- IF YOU DO NOT FULLY UNDERSTAND THESE INSTRUCTIONS, CONTACT YOUR SUPPLIER FOR FURTHER INFORMATION.

*Units featured may not show final controller provided.

Taylor-Wharton

TW-357 HUSUM

TABLE OF CONTENTS

SAFETY PRECAUTIONS FOR LIQUID NITROGEN 3
Extreme Cold - Cover Eyes and Exposed Skin 3
Keep Equipment Area Well Ventilated 3
Liquid Nitrogen System 3
Dispose of Waste Liquid Nitrogen Safely 4
Electrical 4
GENERAL INFORMATION 4
LABS Cryostorage Specifications 5
INSTALLATION 6
Unpacking and Inspection 6
Freight Damage Procedures 6
Repackaging for Shipment 6
Liquid Nitrogen Supply Connection 7
Power Supply Connection 7
OPERATION 7
Initial Fill 7
Operating Parameters 8
Liquid Phase Storage 8
Thermocouple Positioning 8
Adding an Inventory Control System 8
Inventory Control System Layouts (LABS Cryostorage System) 9
MAINTENANCE 13
Strainer Cleaning Instructions 13
Defrosting Your LABS Cryostorage System 13
Cleaning Your Taylor-Wharton Cryostorage System 13
Normal Evaporation Rate (NER) Test 14
TROUBLESHOOTING 14
Symptoms 14
REPLACEMENT PARTS 14
FREEZER SERVICE AND MAINTENANCE HISTORY LOG 15

SAFETY PRECAUTIONS FOR LIQUID NITROGEN

Nitrogen is an inert, colorless, odorless, and tasteless gas making up four-fifths of the air you breathe – and can be **hazardous**. Air is roughly one-fifth oxygen. Liquid nitrogen is at a temperature of -320°F (-196°C) under normal atmospheric pressure.

Extreme Cold - Cover Eyes and Exposed Skin

Accidental contact of liquid nitrogen or cold issuing gas with the skin or eyes may cause a freezing injury similar to frostbite. Handle the liquid so that it won't splash or spill. Protect your eyes and cover the skin where the possibility of contact with the liquid, cold pipes and cold equipment, or cold gas exists. Safety goggles or a face shield should be worn when operating this equipment. Insulated gloves that can be easily removed and long sleeves are recommended for arm protection. Trousers without cuffs should be worn outside boots or over the shoes to shed spilled liquid.

Keep Equipment Area Well Ventilated

Although nitrogen is non-toxic and non-flammable, it can cause asphyxiation in a confined area without adequate ventilation. Any atmosphere not containing enough oxygen for breathing can cause dizziness, unconsciousness, or even death. Nitrogen is a colorless, odorless, and tasteless gas that cannot be detected by the human senses and will be inhaled normally as if it were air. Without adequate ventilation, the expanding nitrogen will displace the normal air resulting in death or asphyxiation.

Liquid Nitrogen System

The liquid nitrogen supply pressure at the inlet to the refrigerator should be in the range of 10 psig (0.7 bar/69 kPa) to 22 psig (1.4 bar/152 kPa) for optimum performance. Higher operating pressures will increase transfer losses and create excessive turbulence of the liquid in the refrigerator which can generate false signals to the liquid level controller causing the refrigerator to under-fill. In "liquid phase" storage applications, excessive turbulence can cause splashing which could result in personal injury and/or damage to the refrigerator. When installing piping or fill hose assemblies, make certain a suitable safety relief valve is installed in each section of plumbing between shut-off valves. Trapped liquefied gas will expand rapidly as it warms and may burst hoses or piping causing damage or personal injury. A relief valve is installed in the refrigerator plumbing to protect the line between the customer supplied shut-off valve and the refrigerator solenoid valve.

For more detailed information concerning safety precautions and safe practices to be observed when handling cryogenic liquids consult CGA pamphlet P-12 "Handling Cryogenic Liquids" available from the Compressed Gas Association, 1235 Jefferson Davis Highway, Arlington, VA 22202.

WARNING:
The following safety precautions are for your protection. Before installing, operating, or maintaining this unit read and follow all safety precautions in this section and in reference publications. Failure to observe all safety precautions can result in property damage, personal injury, or possibly death.

Caution:
When installing field fabricated piping, make certain a suitable safety valve is installed in each section of piping between shut-off valves.

WARNING:
Inlet pressure should not exceed 22 psig (1.5 bar/152 kPa). Higher pressures could result in damage to equipment.

Dispose of Waste Liquid Nitrogen Safely

Dispose of waste liquid nitrogen out-of-doors where its cold temperature cannot damage floors or driveways and where it will evaporate rapidly. An outdoor pit filled with clean sand or gravel will evaporate liquid nitrogen safely and quickly.

WARNING: Electrical shock can kill. Do not attempt any service on these units without first disconnecting the electrical power cord.

Electrical

The liquid level controllers used with these refrigerators operate from 16.5 VAC. However, the external transformer does have an 110/220 VAC primary. Read the **WARNING** before attempting any service.

GENERAL INFORMATION

Thank you for purchasing this product. This state-of-the-art Cryogenic System can be used in either the liquid or vapor phase. Units are supplied with Taylor-Wharton approved controllers. If other liquid level controllers are used, please contact Taylor-Wharton before putting the refrigerator into service.

Taylor-Wharton LABS Cryostorage Systems are designed for applications where extremely low temperature storage of biological products is required. They are also appropriate for industrial or other applications where liquid nitrogen temperatures and high capacity are needed.

The LABS style refrigerator covered by this publication is designed for, but not limited to, the laboratory environment. Each model is supplied with locking casters to enable limited mobility for cleaning and positioning purposes.

The standard model is also equipped with a Taylor-Wharton approved electronic liquid level controller that will help monitor and control the supply of liquid nitrogen to the unit. The addition of a liquid nitrogen supply and inventory control racks for systematic retrieval of stored product completes the total Cryostorage System.

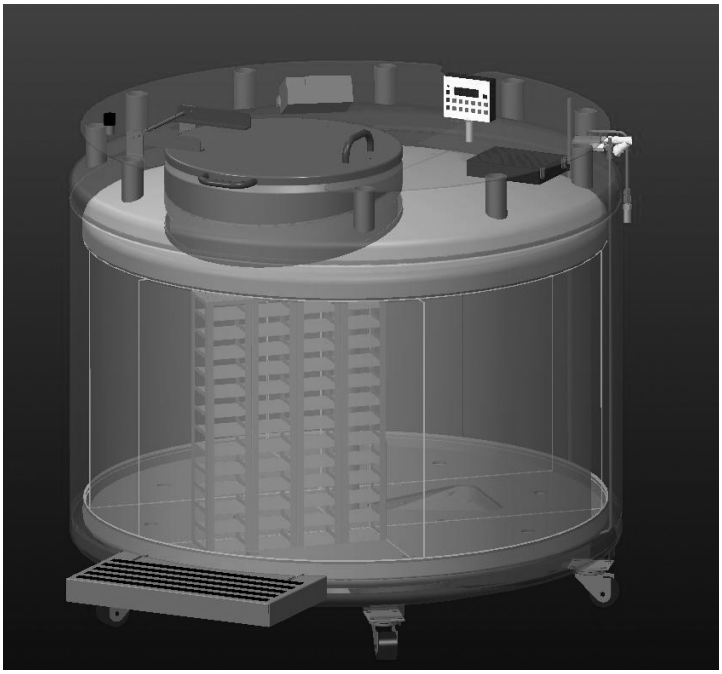

LABS 80K

LABS Cryostorage Specifications

Liquid nitrogen at atmospheric pressure weighs 1.78 lb./liter (0.8 kg/liter). All Taylor-Wharton Gas Equipment CryoScience systems are designed to support the full weight of liquid nitrogen and a complete stainless steel or aluminum inventory control system with boxes and specimens.

Dimensions		**20K**	**38K**	**40K**	**80K**	**94K**
External Operating Height	in.	42	44	42	42	40
(Top of Step to Lid opening)	mm	1067	1118	1067	1067	1016
Step Height[1]	in.	11	11.5	11	11/17	11/22
	mm	279	292	279	279/432	279/559
Height	in.	53	56	53	53	63
(Floor to Opening)	mm	1346	1422	1346	1346	1600
Usable Height, Internal	in.	30	30	30	30	35.75
	mm	762	762	762	762	908
Outside Diameter	in.	34	42	45	59.5	59.5
	mm	864	1067	1143	1511	1511
Internal Working Diameter	in.	29.5	37.8	40.5	55	55
	mm	750	959	1029	1397	1397
Neck Opening	in.	13	18	18	24.5	24.5
	mm	330	457	457	622	622
Capacity						
Total LN_2 Capacity	L	407	626	606	1350	1630
LN_2 Under Capacity	L	46	72	76	150	300
Power Supply[2]	VAC	110/220	110/220	110/220	110/220	110/220
Weight, Empty	lb.	650	930	920	1550	1700
	kg	295	422	417	703	771
Maximum Gross Weight[3]	lb.	1375	2050	2000	3956	4600
	kg	624	930	907	1794	2086
Inventory Control System Specifications						
No. 100/81 Cell Racks		14	26	30	58	60
No. Shelves/Rack		13	13	13	13	15
No. 25 Cell Racks		4	12	8	12	8
No. Shelves/Rack		13	13	13	13	15
Vial Capacity, 2 ml[4]		19500	37700	41600	79300	93000
Bag 25 ml (7 Level Rack)[5]		1624	2688	3108	5999	6856
Bag 50 ml (7 Level Rack)[5]		924	1582	1876	3381	3864
Bag 250 ml (5 Level Rack)[6]		500	900	990	1920	2304
Bag 500 ml (5 Level Rack)[6]		420	690	830	1610	1932

Footnotes:

[1] Model LABS 94K has an independent two stage stainless step. Also available as an option on the LABS 80K.

[2] Controller reduces power to 24VAC or less. Power outlet configuration should be indicated at time of order.

[3] Includes the empty weight and total LN_2 capacity weight.

[4] 2 ml vial size; 12.5 mm O.D. internal thread. 6-2 half-rack capacity of 94,200.

[5] Model LABS 94K, 8 Level Rack

[6] Model LABS 94K, 6 Level Rack

INSTALLATION

Unpacking and Inspection

Crated LABS 38K

Inspect shipping containers for external damage. All claims for damage (apparent or concealed) or partial loss of shipment must be made in writing within five (5) days from receipt of goods. If damage or loss is apparent, please notify the appropriate parties as indicated below:

Domestic LTL Shipments – The customer should notify and file the appropriate damage claims with the carrier. All products are shipped FOB Origin.

Domestic UPS Shipments – Any damage should be noted and reported to shipper upon delivery, and Taylor-Wharton must also be notified. Confirm with Taylor-Wharton Customer Service the filing procedures for any UPS damage claims.

International Shipments – Any damage and/or claims are to be filed with the carrier. Insurance agent(s) and customs' brokers should also be notified.

In all cases, Taylor-Wharton should be notified so we can assist if needed in filing damage claims.

Open the shipping containers; a packing list is included with the system to simplify checking that all components, cables, accessories, and manuals were received. Please use the packing list to check off each item as the system is unpacked. Inspect for damage. Be sure to inventory all components supplied before discarding any shipping materials. If there is damage to the system during transit, be sure to file proper claims promptly. Please advise Taylor-Wharton of such filings. In case of parts or accessory shortages, advise Taylor-Wharton immediately. Taylor-Wharton cannot be responsible for any missing parts unless notified within 60 days of shipment.

Freight Damage Procedures

Any freight damage claims are your responsibility. Cryostorage Systems are delivered to your carrier from Taylor-Wharton's dock in new condition; when you receive our product you may expect it to be in that same condition. For your own protection, take time to visually inspect each shipment in the presence of the carrier's agent before you accept delivery. If any damage is observed, make an appropriate notation on the freight bill. Then, ask the driver to sign the notation before you receive the equipment. You should decline to accept containers that show damage which might affect serviceability.

Repackaging for Shipment

If it is necessary to return any part of the system for repair or replacement, a Material Return Authorization (MRA) number must be obtained from an authorized factory representative before returning the equipment to our service department. Contact your distributor for return authorization. When returning equipment for service, the following information must be provided before obtaining an MRA:

A. System model and serial number, and controller model and unit, if available.
B. User's name, company, address, and phone number
C. Malfunction symptoms

If possible, the original packing material should be retained for reshipment. If not available, consult Taylor-Wharton for shipping and packing instructions. It is the responsibility of the customer to assure that the goods are adequately packaged for return to the factory. *All refrigerators returned to Taylor-Wharton must be clean and sterile before return. See page 13 for cleaning instructions.*

Liquid Nitrogen Supply Connection

The package included with the refrigerator includes a strainer. The liquid fill hose from a low pressure source of liquid nitrogen must be connected to the inlet through this fitting. This liquid nitrogen source must have a shut-off valve, and may be any portable liquid cylinder or a bulk supply. **The liquid nitrogen supply pressure at the inlet to the refrigerator should be in the range of 10 psig (0.7 bar/69 kPa) to 22 psig (1.4 bar/152 kPa) for optimum performance. Higher operating pressures will increase transfer losses and create excessive turbulence of the liquid in the refrigerator which can generate false signals to the liquid level controller causing the refrigerator to under-fill.** In "liquid phase" storage applications, excessive turbulence can cause splashing which could result in personal injury and/or damage to the refrigerator. If the liquid nitrogen supply pressure at the inlet to the refrigerator rises above the opening pressure of the relief valve on the refrigerator, liquid nitrogen will be discharged into the surrounding area which can cause a rapid and very dangerous depletion of oxygen in the atmosphere. Once this pressure relief device has opened and cooled to liquid nitrogen temperature, it will not reseat until it has warmed to near ambient temperature. THIS COULD PERMIT THE ENTIRE CONTENTS OF THE LIQUID NITROGEN SUPPLY SYSTEM TO BE DISCHARGED INTO THE IMMEDIATE AREA OF THE REFRIGERATOR(S) (SEE WARNING). IT IS RECOMMENDED TO HAVE THE FREEZER RELIEF VALVE CONNECTED TO VENT LINE THAT EXHAUSTS TO THE OUTSIDE ATMOSPHERE.

WARNING:
In order to prevent the relief device on the nitrogen refrigerator(s) from opening when the system is in operation, the liquid nitrogen supply system must be protected by a pressure relief device that will open when the pressure at the inlet to the refrigerator(s) is approximately 22 psig (1.5 bar/152 kPa). Never install the supply system pressure relief device onto a liquid service line.

Power Supply Connection

Connect the power supply to the LABS Cryostorage System and then plug the power supply into a surge protected 110/220 VAC outlet.

OPERATION

These instructions are for operators experienced with cryogenic equipment. Before operating the system, become familiar with the safety precautions in this LABS manual and in the operating manual for the controller model you are using with your LABS unit. Make certain all applicable provisions set forth in the Installation Section have been followed before placing a system in operation. Study this manual thoroughly. Know the location and function of all system components.

WARNING:
Maintain adequate ventilation to prevent asphyxiation hazard (see Safety Precautions).

Initial Fill

The LABS Cryostorage System comes preset for vapor phase storage from the factory. The liquid nitrogen supply pressure at the inlet to the refrigerator should be in the range of 10 psig (0.7 bar/69 kPa) to 22 psig (1.4 bar/152 kPa) for optimum performance. Higher operating pressures will increase transfer losses and create excessive turbulence of the liquid in the refrigerator which can generate false signals

WARNING:
If the fill fails to stop for any reason, quickly close the liquid supply valve to prevent overfilling until the cause of the problem can be determined.

to the liquid level controller causing the refrigerator to under fill. In “liquid phase” storage applications, excessive turbulence can cause splashing which could result in personal injury.

Operating Parameters

When materials are immersed in liquid nitrogen, they will assume the temperature of the liquid (-196°C/-320°F). When material is stored in the vapor phase over the liquid, the liquid nitrogen is still a very cold refrigerant, but the refrigerator’s interior temperature increases somewhat as product is stored higher over the liquid. This temperature differential is not significant in many biological storage applications, and is affected by the amount of product stored in the refrigerator, the type and size of inventory control system, and the liquid level in the unit.

Liquid Phase Storage

Liquid phase storage is normally utilized when liquid nitrogen temperatures are required to maintain stored product viability and the storage medium is adequate for storage in liquid nitrogen. To reconfigure the system’s setting for liquid phase, review the operating instructions for the specific controller you have selected to use with your LABS unit.

Thermocouple Positioning

The thermocouple is a separate sensor used to monitor and control the temperature within the refrigerator. The factory-supplied thermocouple in most of the LABS Cryostorage Systems is positioned to monitor the temperature below the top of the carousel. For example, in the LABS 94K, the thermocouple is positioned to monitor the temperature 1.75 in. (44.45mm) below the top of the carousel.

Adding an Inventory Control System

The purpose of the inventory control system is to bring order to the storage of many small samples, and to allow direct retrieval of the particular sample you need at any time. It is important to be aware that when you lift an ICS rack from the refrigerator it is being moved to a warmer environment. Learn to locate your sample quickly to avoid unnecessary warming of your stored product. Keep ICS inserts (drawers or boxes) and dividers in good repair. Replacement inserts and dividers are available from your Taylor-Wharton distributor to keep your system as efficient as possible.

Always wear gloves when handling ICS racks or stored product, as they are very cold. Read all of the precautions in the Safety section of these instructions and in the Taylor-Wharton publication TW-10 “Handle With Care” for more detail on handling product stored in liquid nitrogen.

When removing ICS racks to retrieve product, protect the labels, plastic, and electronic areas of the refrigerator from liquid nitrogen that may spill from the rack inserts. These parts of the refrigerator are subject to damage from the extreme low temperature of the refrigerant.

Do not let ice or debris collect in the bottom of the freezer. Schedule periodic clean out if racks no longer stand upright.

Inventory Control System Layouts (LABS Cryostorage System)

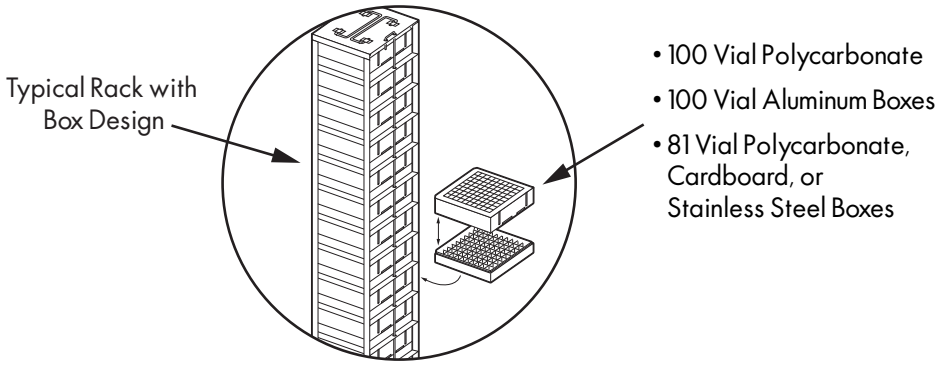

LABS 20K

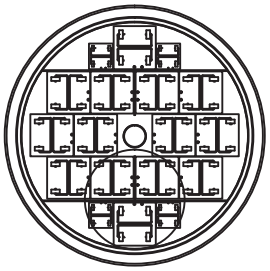

LABS 38K

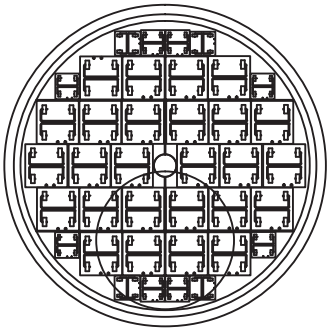

LABS 40K

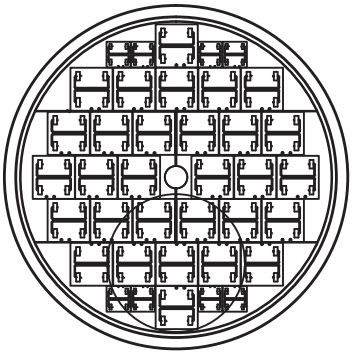

LABS 80K

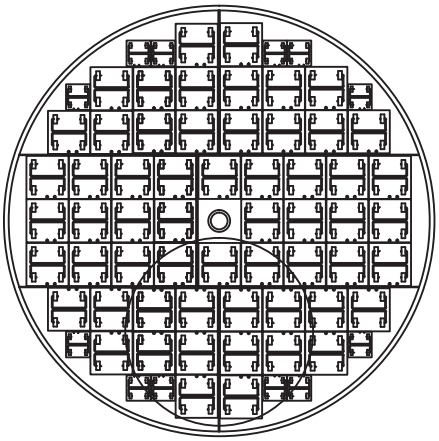

LABS 94K

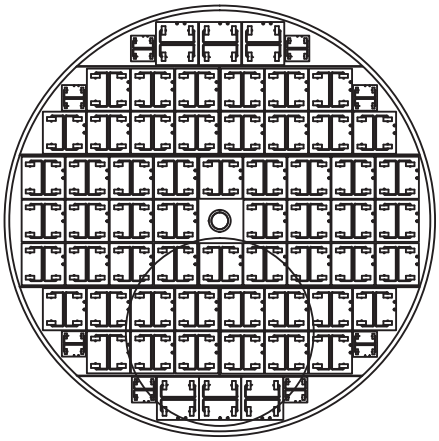

NOTE:
Racks are not square.
Orientation is important.

2 ml vial storage – ask about other Box types

Part Number	Racks 15 x 2 x 100	Racks 13 x 2 x 100 R23K-8C35	Racks 15 x 2 x 25	Racks 13 x 2 x 25 R10K-9C44	Boxes-100 N-374187-92 (Case of 24 Polycarbonate)	Boxes-25 N-374180 (Case of 36 Polycarbonate)	Vial Capacity Max. Allowable
LABS 20K	-	14	-	4	182	52	19500
LABS 38K	-	26	-	12	338	156	37700
LABS 40K	-	30	-	8	390	104	41600
LABS 80K	-	58	-	12	754	156	79300
LABS 94K	60	-	8	-	900	120	93000

Figure 1.0 Vial Storage on Racks

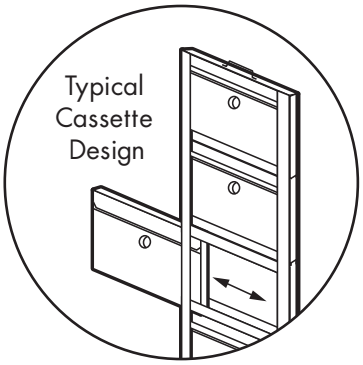

LABS 20K

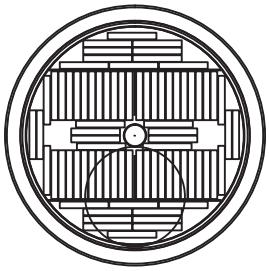

LABS 38K

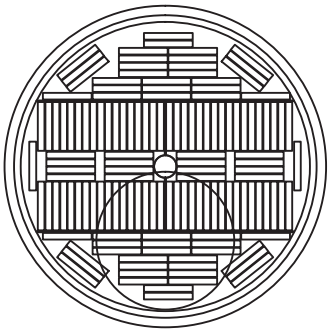

LABS 40K

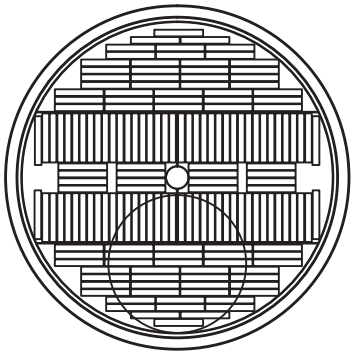

LABS 80K

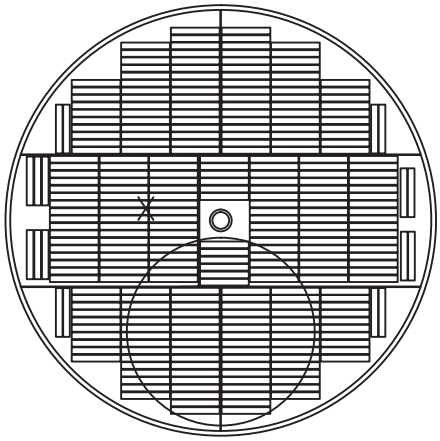

LABS 94K

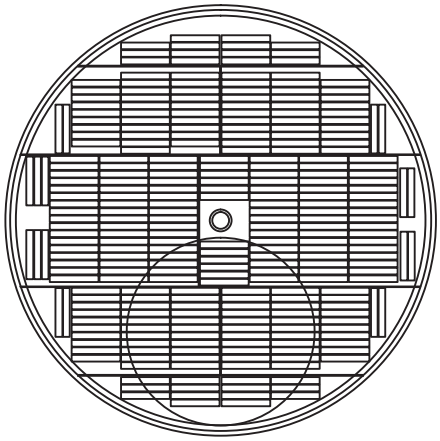

Part Number	Capacity	Frames	Cassettes
LABS 20K	924	132	924
LABS 38K	1582	226	1582
LABS 40K	1876	268	1876
LABS 80K	3381	483	3381
LABS 94K*	3864	483	3864

Figure 2.0 Rack Arrangements for 50 ml Cassettes

**LABS 94K use an 8-level rack. All other units utilize a 7-level rack configuration.*

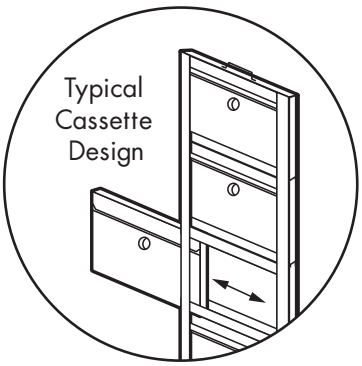

LABS 20K

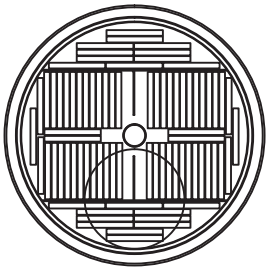

LABS 38K

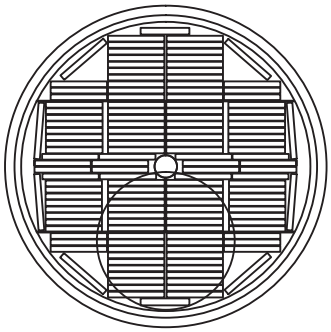

LABS 40K

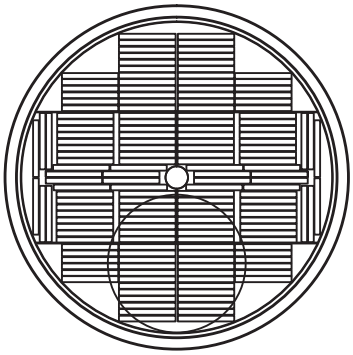

LABS 80K

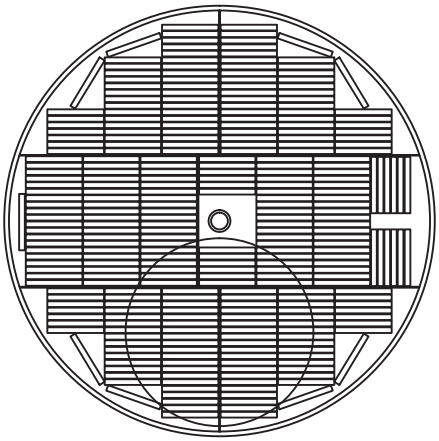

LABS 94K

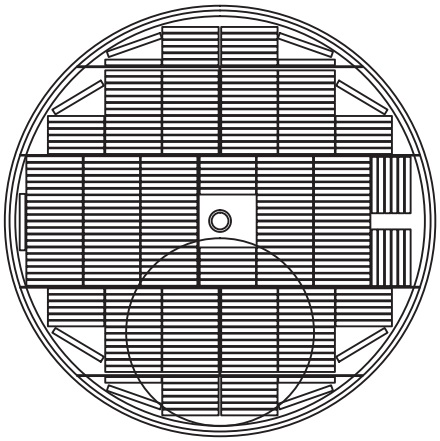

Part Number	Capacity	Frames	Cassettes
LABS 20K	500	100	500
LABS 38K	900	180	900
LABS 40K	990	198	990
LABS 80K	1920	384	1920
LABS 94K*	2304	384	2304

Figure 3.0 Rack Arrangements for 250 ml Cassettes

**LABS 94K use a 6-level rack. All other units utilize a 5-level rack configuration.*

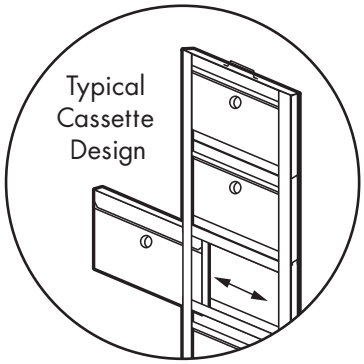

LABS 20K

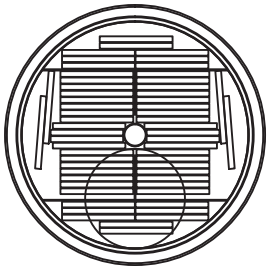

LABS 38K

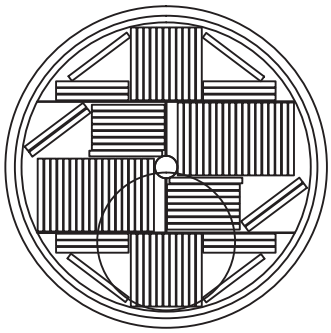

LABS 40K

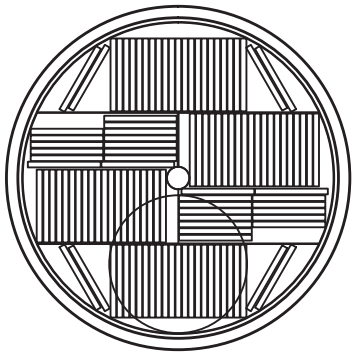

LABS 80K

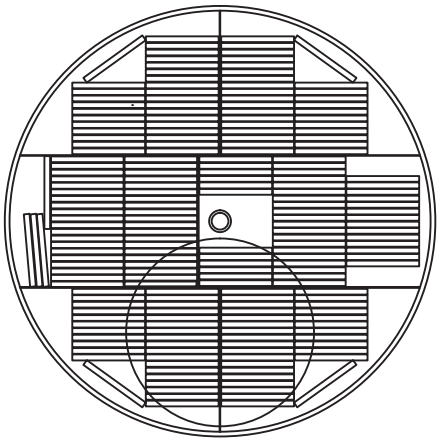

LABS 94K

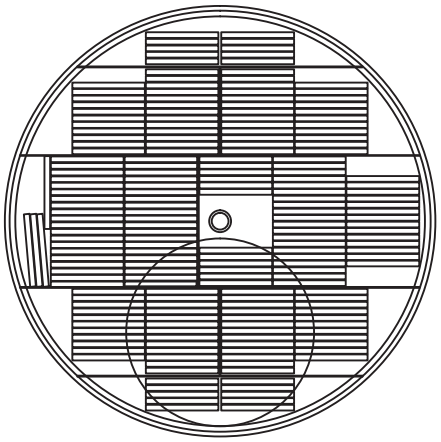

Part Number	Capacity	Frames	Cassettes
LABS 20K	420	84	420
LABS 38K	690	138	690
LABS 40K	830	166	830
LABS 80K	1610	322	1610
LABS 94K*	1932	322	1932

Figure 4.0 Rack Arrangement for 500 ml Cassettes

**LABS 94K use a 6-level rack. All other units utilize a 5-level rack configuration.*

MAINTENANCE

Strainer Cleaning Instructions

The container will not fill properly if the strainer is clogged with ice or dirt. To clean the strainer, first close the supply valve to the refrigerator. Vent the fill line of all pressure. Remove and warm the strainer to ambient temperature. Purge the strainer from both directions with dry nitrogen gas or dry oil-free air. Rinse the strainer with alcohol and purge it again with dry nitrogen gas or dry oil-free air to clear contaminants. If the cleaning process doesn't clear the blockage, replace with a new filter (P/N 7631-1080).

Defrosting Your LABS Cryostorage System

All liquid nitrogen storage systems are subject to ice and frost buildup over time. Regular preventive maintenance programs should be instituted to remove ice and frost from the sensor and fill tubes and from the refrigerator lid. Ice and frost buildup in the sensor tube may result in false readings being relayed to the controller from the sensors. Ice can form a thermal barrier around a level sensor, rendering it insensitive to the temperature differences between vapor and liquid. If the fill line becomes blocked, it must be warmed until the ice blockage is cleared.

Ice and frost buildup in the fill tube may block the flow of liquid nitrogen into the refrigerator during fill. This blockage can result in the liquid level dropping to dangerously low levels, and may result in the Low Alarm sensor being activated. In addition, a fill line blockage may cause the Low LN_2 Supply Alarm to be activated.

If it is determined that defrosting is necessary the following procedure must be followed. Cryogenic freezers of these types must be carefully warmed to ambient temperatures to avoid the ingress of water. As long as liquid nitrogen is present in the unit, the evaporation of the liquid nitrogen provides slightly positive gas pressure in the unit, preventing the entrance of moisture laden air. When all of the liquid nitrogen has evaporated but the unit temperature is still below the dew point of the surrounding atmosphere, condensation will start to collect in the unit. When frost and condensation collect in the unit, staining of the carousel or damage to the level sensors will occur. If one of these units is to be taken out of service for any reason the following steps must be performed to avoid damaging the unit.

1. Disconnect power and liquid nitrogen source.
2. Remove all stored product and inventory control system components.
3. Remove Sensors.
4. A source of nitrogen gas must be found and used to purge the unit as the temperature rises to ambient. The purge gas can be installed on the sensor tube or fill tube or into the liquid via the trap door in the bottom of the carousel after the appropriate components have been removed. The purge gas may also simply be delivered to the unit through a bent metal tube under the lid. A flow rate of 5 to 10 SCFM is sufficient to prevent water from collecting inside the unit. This flow of purge gas will also speed the warming of the unit to ambient temperature.

Cleaning Your Taylor-Wharton Cryostorage System

The cryogenic vessel of all LABS Cryostorage Systems may need to be cleaned, and sterilized if the type of stored product is changed or the unit is taken out of service. ***The vessel must be defrosted, cleaned, and sterilized regardless of the type of stored product, prior to return to Taylor-Wharton for repair or maintenance.***

WARNING:
Never use chlorine-based disinfectants to clean a LABS Cryostorage System.

Prior to cleaning, the unit must be warmed and defrosted as described in the previous section.

To clean and sterilize your defrosted LABS Cryostorage System, spray the entire inner vessel surface with ample amounts of an approved & compatible disinfectant. Allow surface contact to be maintained for a minimum of five minutes. Rinse the inner vessel with water, remove all water and debris through the access opening located in the carousels bottom tray, and vacuum or towel dry the surface. Spray the inner vessel surface with a 70% alcohol to water solution and maintain surface contact for fifteen minutes. Rinse the inner vessel surface with water and vacuum or towel dry excess water. Final dry the inner container, sensor line, and fill line using a nitrogen gas purge.

Normal Evaporation Rate (NER) Test

WARNING: Never use hollow rods or tubes as dipsticks. When a warm tube is inserted into liquid nitrogen, liquid will spout from the top of the tube and may cause personal injury.

Nitrogen consumption is an accumulation of all system components and user introduced evaporation. The storage chamber is a double walled, vacuum insulated vessel and contributes to the daily consumption of liquid nitrogen. The liquid nitrogen supply vessel and transfer hose also contribute greatly to the daily consumption rate. Choosing to control the vapor temperature, combined with the liquid level and temperature specified, will affect the overall nitrogen consumption. In addition to these variables, opening the lid to retrieve product, and adding new product into the storage chamber will pay a role in the accumulative liquid nitrogen consumption.

If the nitrogen consumption of your Cryostorage System seems excessive, it may be appropriate to perform an estimated Normal Evaporation Rate (NER) test on the Cryostorage chamber. To perform an NER test:

WARNING: The source power supply at 110/220 can cause a lethal electrical shock. Unplug the power cord before beginning any repairs.

1. Fill the Cryostorage unit to the “High Level” sensor.
2. Measure the liquid nitrogen level with a plastic or wooden measuring rod.
3. Close and lock the lid of the LABS Cryostorage System for forty-eight (48 hours).
4. Open the LABS Cryostorage System and measure the liquid nitrogen level. Typically, liquid nitrogen levels will drop approximately 3/8 in. (9.53 mm) per day. If your measurement indicates a drop in excess of 3/4 in. (19 mm) per day, please contact your Taylor-Wharton distributor or Taylor-Wharton for further information. Please have your serial number, this manual and service history available.

TROUBLESHOOTING

Symptoms

The key to troubleshooting your LABS Cryostorage System is to determine which component in the system is the source of the problem. Utilizing this manual along with your controller’s manual, determine if the problem is occurring in any of the following subsystems: Supply Vessel, Transfer Line, Power Source, Temperature, Level Sensing, Security, Lid Switch, Solenoid Valve, Control Display, Alarm System, Communications. After determining which sub-system is having the problem, isolate the problem further by performing sub-system tests. Once the problem is isolated and defined, it will be easier to solve.

REPLACEMENT PARTS

A complete list of Replacement Parts and Accessories for the LABS Series is available from the following Taylor-Wharton Customer Care Centers:

Taylor-Wharton Slovakia s.r.o.
Vstupny areal U.S. Steel
044 54 Kosice
Phone: +421 (0)55-727-7124
Fax: +421 (0)55-727-7157

Taylor-Wharton Germany GmbH.
Postfach 1470
D-25804 Husum
Phone: +49 (0)4841-985139
Fax: +49 (0)4841-985130

Or email SalesEurope@taylorwharton.com

FREEZER SERVICE AND MAINTENANCE HISTORY LOG

Fill in top section at installation. Copy this form each time service is required.
Fill bottom section with service notes to keep a complete log of each freezer service and maintenance history.

End User Company Name _____ LOG NO _____

Service Contract/NameCompany_____

Service Contract Phone Number/Fax_____

LABS-series Model/Serial Number _____

Controller Serial Number_____

Control Version Number _____

In-service Date_____

Describe Conditions – Actual	Describe Conditions – Controller Reading
Liquid Level – via Dipstick _____	Liquid Level – Per Controller _____
Level Sensor Type _____FG_____ 8T_____4T _____	Liquid Level Setting _____ HIGH _____LOW
Lid _____ Open_____ Closed	Lid_____Open _____ Closed
Filling _____ Yes_____ No	Filling _____Yes_____No
Temperature _____	Temperature _____
LN_2 Supply _____ltr_____ psi	Supply Alarm _____On _____ Off
Note: Ice Build-up_____a little _____a lot	Remote Alarm_____ On _____ Off
Note: Gasket condition _____ Seals_____ Leaks	Audible Alarm_____ On _____ Off
Display Lights_____On _____ Off	Temp. control setpoint @ _____ degrees

Taylor-Wharton Technical Services – Fax: +421 (0)55-727-7157 Kosice or +49 (0)4841-985130 Husum

Service History Log (note date and log number on each service entry)

Date: _____

Date: _____

Date: _____

Date: _____

Date: _____

Date: _____

Date: _____

Date: _____

Date: _____

Date: _____

NOTE: All Taylor-Wharton Cryostorage Systems must be cleaned and sterilized prior to return to Taylor-Wharton for repair or maintenance and must be accompanied by a written statement to this effect. Any LABS-Service Cryostorage System received without this statement will be returned to the sender, freight collect. Contact Customer Service by phone: +421 (0)55-727-7124 Kosice or +49 (0)4841-985139 Husum. Or email SalesEurope@taylorwharton.com.

Taylor-Wharton

Delivering on our promise.™

Taylor-Wharton Germany GmbH.
Postfach 1470
D-25804 Husum
Phone: +49 (0)4841-985139
Fax: +49 (0)4841-985130
SalesEurope@taylorwharton.com

CryoScience Information Centers:

America
Taylor-Wharton Cryogenics LLC
SalesAmericas@taylorwharton.com

Asia
Taylor-Wharton (Beijing) Taylor-Wharton Malaysia
SalesAsia@taylorwharton.com

TW-357 HUSUM 12/2011

P/N 7950-8357